ICMIEE-PI-140251

Interface Stress Analysis of Two Bonded Isotropic Materials by Finite Difference Method

A. I. Khan , Yeasin Bhuiyan, Abdus Salam Akanda*
Department of Mechanical Engineering, BUET, Dhaka-1000, BANGLADESH

ABSTRACT
Bi-layer composites, such as metal-metal, steel-polymer, concrete-steel etc., having different mechanical properties layer by layer are widely used for modern structures. This paper deals with the stress analysis of two bonded isotropic materials called bi-layer composite materials. Materials under consideration are assumed to be perfectly bonded together. A numerical model (Finite Difference Method) for rectangular geometry based on displacement potential function has been developed to investigate the problem. In each layer of the composite the mechanical properties are isotropic. Finite difference scheme has been developed for the management of boundary conditions so that all possible mixed boundary conditions can be applied in any boundary points as well as at the interface of isotropic layers. Special numerical formulations yield to new formula structures are employed at the interface as well as adjacent boundary points of the interface. An effective programming code has been developed in FORTRAN language to solve the problem of bi-layer composites. In order to compare the results by the present finite difference method, another numerical technique namely finite element method is used. Validation of the results is performed by using commercially available FEM package software. It is observed that the results agree well within the acceptable limit, which also confirms to the reliability of the finite difference method. At the interface, there is a single value for each displacement component but two different values for each stress component of the bi-layer composite having different mechanical properties in each layer. Like as usual critical zone of a bi-layer composite under mechanical loading, the interfacial zone is also a zone of critical stresses. Changing in Poisson's ratio in any layer has significant effects on the results of all layers of the bi-layer composite. Due to the mathematical expressions of stresses and displacements for two dimensional elastic problems, the study of the effects of Poisson's ratio is intricate rather the study of the effects of Modulus of elasticity is straightforward. In general, the material having higher modulus of elasticity experiences higher stresses.

Keywords: Bi-layer composites, displacement potential function, finite difference method.

1. Introduction
Now-a-days composite is a very common word because of its multipurpose application in many industries such as aerospace, automotive, marine, construction etc. The word "composite" means 'consisting of two or more distinct parts'. Composites are formed by combining materials together to form an overall structure that is better than the individual components. The constituent materials have significantly different physical or chemical properties, that when combined, produce a material with characteristics different from the individual components. The individual components remain separate and distinct within the finished structure. In bi-layer composite, there are two materials bonded together having different mechanical properties.

The concept of stress analysis of the bi-layer composite is relatively new. But increasing demand of the bi-layer composite made it very lucrative field for research. Zabulionis [1] performed stress and strain analysis of a bi-layer composite beam under hygrothermal loads considering slip at the interface of the layers. It was solved analytically assuming that load-slip relationships for the interlayer connections are linear and layers' stress and elastic displacement relation is linear. Long et al. [2] predicted the nominal stress-strain curves of a multi-layered composite material by FE Analysis. Sevecek et al. [3] analytically performed stress-strain analysis of the laminates with orthotropic (isotropic) layers using Classical Laminate Theory and compared it with finite element analysis considering the thermal loading. Some other researchers have used finite element technique for stress analysis of some layered materials [4-6]. Problems with various mechanical loadings were not present in these studies.

Later, the displacement potential function approach of the finite difference method had been extended for investigating bond-line stresses of tire tread section by Sankar et al. [7] and determination of the stresses for composite lamina considering directional mechanical properties was performed by Alam et al. [8]. But it was confined into single layer only. Therefore, stress analysis in layer to layer materials as well as at the interfaces is yet to be solved by this approach.

From the above survey it is evident that, the present study of finding state of stress and displacement in bi-layer composite for various mechanical loadings is not only an interesting practical subject, but also of great importance because of its presence in many structural components. Application of finite difference technique based on displacement potential function for the solution of interfacial stress as well as in the body will be a new attempt to extend the capability of displacement potential formulation.

* Corresponding author. Tel.: +88-01672122179
E-mail address: a.islam117@gmail.com

2. Governing Equations

Stress analysis in an elastic body is usually a three dimensional problem. But in most cases, the stress analysis of three-dimensional bodies can easily be treated as two-dimensional problem, because most of the practical problems are often found to conform to the states of plane stress or plane strain. In case of the absence of body forces, the equations governing the three stress components σ_x, σ_y and σ_{xy} under the states of plane stress or plane strain are:

$$\frac{\partial \sigma_x}{\partial x} + \frac{\partial \sigma_{xy}}{\partial y} = 0 \quad (1)$$

$$\frac{\partial \sigma_y}{\partial y} + \frac{\partial \sigma_{xy}}{\partial x} = 0 \quad (2)$$

$$\left(\frac{\partial^2}{\partial x^2} + \frac{\partial^2}{\partial y^2}\right)(\sigma_x + \sigma_y) = 0 \quad (3)$$

In absence of body forces, the equilibrium equations for two dimensional elastic problems in terms of displacements components are as follows

$$\frac{\partial^2 u}{\partial x^2} + \left(\frac{1-\mu}{2}\right)\frac{\partial^2 u}{\partial y^2} + \left(\frac{1+\mu}{2}\right)\frac{\partial^2 v}{\partial x.\partial y} = 0 \quad (4)$$

$$\frac{\partial^2 v}{\partial y^2} + \left(\frac{1-\mu}{2}\right)\frac{\partial^2 v}{\partial x^2} + \left(\frac{1+\mu}{2}\right)\frac{\partial^2 u}{\partial x.\partial y} = 0 \quad (5)$$

These two homogeneous elliptic partial differential equations Eq.(4) and Eq. (5) with the appropriate boundary conditions should be sufficient for the evaluation of the two functions u and v, and the knowledge of these functions over the region concerned will uniquely determine the stress components. Although the above two differential equations are sufficient to solve mixed boundary value elastic problems but in reality it is difficult to solve for two functions simultaneously. So, to overcome this difficulty, investigations are necessary to convert equations (Eq. 4 and 5) into a single equation of a single function.

A new potential function approach involves investigation of the existence of a function defined in terms of the displacement components. In this approach attempt had been made to reduce the problem to the determination of a single variable. Thus the problem is reduced to the determination of a single function ψ(x,y) instead of two functions u and v, simultaneously, satisfying the equilibrium Eq.(4) and (5) [9-10] by defining a potential function ψ(x,y) in terms of displacement components as follows as in the case of Airy's stress function φ(x,y) [7],

$$u = \frac{\partial^2 \psi}{\partial x.\partial y} \quad (6)$$

$$v = -\left[\left(\frac{1-\mu}{1+\mu}\right)\frac{\partial^2 \psi}{\partial y^2} + \left(\frac{2}{1+\mu}\right)\frac{\partial^2 \psi}{\partial x^2}\right] \quad (7)$$

With this definition of ψ(x,y), the Eq.(4) is automatically satisfied. Therefore, ψ has only to satisfy the Eq. (5). Thus, the condition that ψ has to satisfy is

$$\frac{\partial^4 \psi}{\partial x^4} + 2\frac{\partial^4 \psi}{\partial x^2.\partial y^2} + \frac{\partial^4 \psi}{\partial y^4} = 0 \quad (8)$$

Therefore, the problem is now formulated in such a fashion that a single function ψ has to be evaluated from bi-harmonic Eq.(8), satisfying the boundary conditions specified at the boundary.

2.1 General Boundary Conditions

In order to solve a problem in terms of potential function ψ of the bi-harmonic equation (Eq. 8), the boundary conditions should be expressed in terms of ψ. The boundary conditions of a problem are known restraints and loadings, that is, known values of components of stresses and displacements at the boundary. The boundary conditions at any point on an arbitrary shaped boundary are known in terms of the normal and tangential components of displacement, u_n and u_t and of stress components σ_n and σ_t. These four components are expressed in terms of u, v, σ_x, σ_y, σ_{xy}, the components of displacement and stress with respect to the reference axes x and y of the body as follows:

$$u_n = u.l + v.m \quad (9)$$

$$u_t = v.l - u.m \quad (10)$$

$$\sigma_n = \sigma_x.l^2 + \sigma_y.m^2 + 2\sigma_{xy}.l.m \quad (11)$$

$$\sigma_t = \sigma_{xy}.(l^2 - m^2) + (\sigma_y - \sigma_x).l\,m \quad (12)$$

Now these above boundary conditions can be expressed in terms of ψ by substituting the following expressions of the components of displacement and stress into Eq.(9) to (12).

$$u = \frac{\partial^2 \psi}{\partial x.\partial y} \quad (13)$$

$$v = -\left[\left(\frac{1-\mu}{1+\mu}\right)\frac{\partial^2 \psi}{\partial y^2} + \left(\frac{2}{1+\mu}\right)\frac{\partial^2 \psi}{\partial x^2}\right] \quad (14)$$

$$\sigma_x = \frac{E}{(1+\mu)^2}\left[\frac{\partial^3 \psi}{\partial x^2 \partial y} - \mu\frac{\partial^3 \psi}{\partial y^3}\right] \quad (15)$$

$$\sigma_y = -\frac{E}{(1+\mu)^2}\left[\frac{\partial^3 \psi}{\partial y^3} + (2+\mu)\frac{\partial^3 \psi}{\partial x^2 \partial y}\right] \quad (16)$$

$$\sigma_{xy} = \frac{E}{(1+\mu)^2}\left[\mu\frac{\partial^3 \psi}{\partial x^2 \partial y} - \frac{\partial^3 \psi}{\partial x^3}\right] \quad (17)$$

From the above expressions it is found that, as far as boundary conditions are concerned, either known restraints or known stresses or combinations of stresses and displacements, all can be converted to finite difference expressions in terms of ψ at the boundary.

2.2 Model Problem and its Boundary Conditions

A model problem is chosen for this study is shown in fig 1(a). It is a bi-layer composite under uniform axial loading. Length =1.5*width i.e. b=1.5*a. The interface lies at a distance of a/2 from the top or bottom edge of the bi-layer composite. The purpose of the paper is to investigate the interface stress and strain i.e. displacements. The modulus of elasticity and Poission's

ratio of the upper material of the bi-layer composite is E_1 and μ, and for lower material is E_2 and μ_2 respectively. The necessary boundary conditions are shown in fig 1(b). The left edge is rigidly fixed that makes $u_n, u_t=0.0$ for $0 \le x \le a$ and $y=0$. The upper and bottom edge is free and obviously $\sigma_n, \sigma_t=0$ for $0 \le y \le b$ and $x=0$ or a. The boundary conditions at the right edge is given in terms of normal and tangential components of stress $\sigma_n=P=2x\ 10^{-4}$ and $\sigma_t=0.0$ for $0 \le x \le a$ and $y=b$. The stress components are normalized by young modulus, E which is the average of E_1 and E_2.

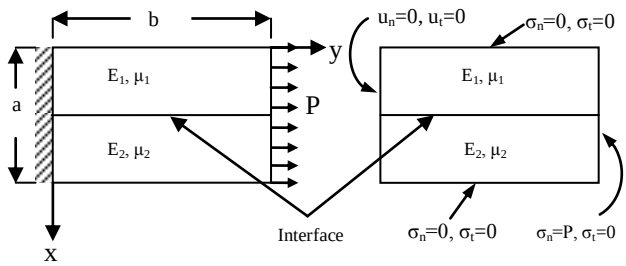

a) b)

Fig.1 a) Axially loaded member and b) Necessary boundary conditions.

3. Solution of the Problem

For the solution of the problem, a two dimensional mesh is generated based on rectangular coordinate system. The function ψ from the governing Eq.(8) is evaluated at various mesh points inside the body using central difference formula. The function ψ from the boundary conditions is evaluated in the same manner by forward and backward difference formula at the boundary points depending on the physical boundary. A FORTRAN code has been developed to investigate various aspect of the problem. The full procedure of the management of boundary conditions has already been discussed in the papers [11-13]. But at the interface of the bi-layer composite the above procedure [11-13] of the management of boundary conditions does not give satisfactory results. In this paper, a new procedure of the management of boundary conditions at the interface has been developed. Among boundary conditions those depend on material properties have to be managed under this new procedure. The displacement component, u has not to be modified by new procedure because it does not depend on material properties Eq.(13). The displacement component, v is dependent on the material properties and continuous over the bi-layer composite. At the interface, two materials are perfectly bonded together, hence the displacement component, v of the common node point is the average of the two displacement components v_1 and v_2 considering through the each side of the material. So, at the left side of the interface it could be written as-

$$v_1)_{i,j} + v_2)_{i,j} = 2v \tag{18}$$

Stencil of this Eq.(18) is shown in fig. 2.

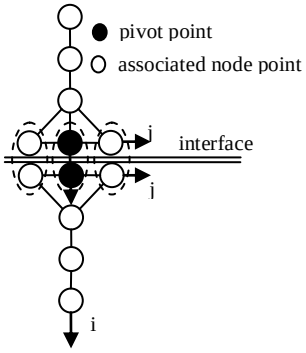

Fig. 2 Stencil of v at the left point of the interface line.

At the interface two points from upper and lower material are actually bonded together in a bi-layer composite. The normal stress acting at the interface boundary point is shown in Fig. 3(a) and shear stress acting at the interface is shown in fig. 3(b).

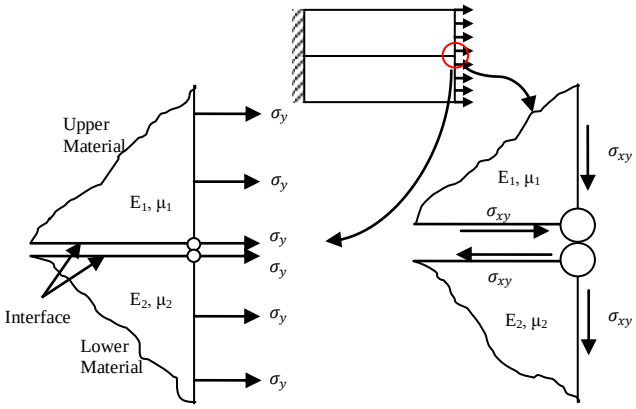

a) Normal stress b) Shear stress

Fig.3 a) Normal stress and b) Shear stress at the interface of bi-layer composite.

The average of normal stresses of upper material and that of lower material should be equal to the applied normal stress at that point. Thus it could be written as-

$$\sigma_{y1})_{i,j} + \sigma_{y2})_{i,j} = 2\sigma_y \tag{19}$$

By similar fashion, the average shear stress at interface can be written as-

$$\sigma_{xy1})_{i,j} - \sigma_{xy2})_{i,j} = 2\sigma_{xy} \tag{20}$$

The stencils of the above two Eq.(19) and (20) are shown in Fig. 4. If one needs to apply boundary conditions σ_y and σ_{xy} at the left boundary interface one can easily formulate finite difference equation by taking mirror reflection about a vertical plane through the member. This is also valid for any other boundary conditions. Besides the above modification of stencils of boundary conditions some other modifications near the interface region is necessary for better results. Due to this, several formula structures are derived for

solving the problem of the bi-layer composite. Although the formulae are correct in mathematical point of view but the coefficient matrices of the system of equations become ill-conditioned and provide ill results, thus become unsuccessful formulae. The stencils of boundary conditions which provide the most accurate solution of the problem from the view point of our experience and coincidences with FEM results are shown in fig.5 which signifies that more inclusions of nodal points of interface region provides better results. Here this modification is necessary only for right boundary because of presence boundary conditions σ_y=P and σ_{xy}=0. But, if left boundary is also subjected by same type boundary conditions then it is also necessary to apply this modification at the left boundary. There is no need of modification for boundary conditions u=0 and v=0 because the existing formulae of these boundary conditions includes nodal points of both materials.

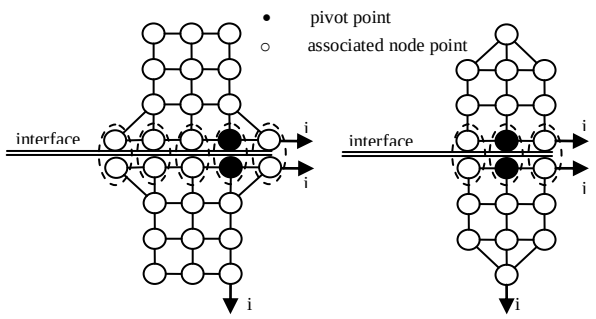

a) b)

Fig.4 Stencil of a) Normal stress and b) Shear stress at right edge of the member.

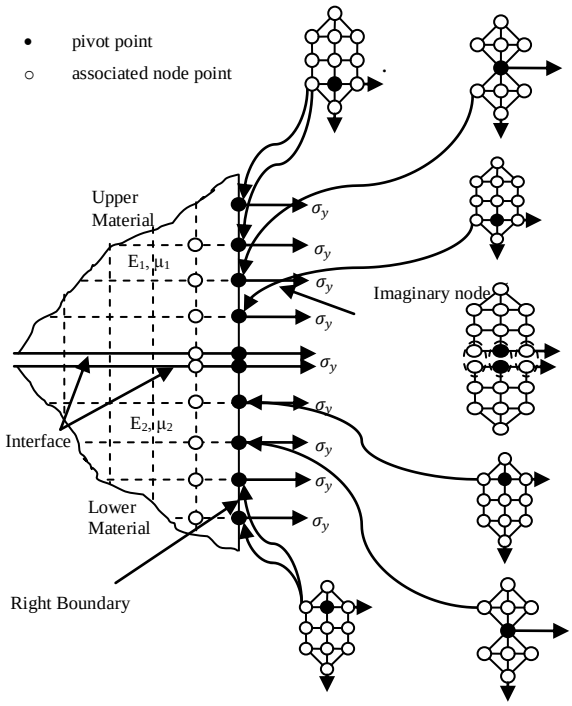

Fig.5 Suitable grid structures of tangential stresses at the adjacent points of the interface.

4. Results and Discussions

Since no analytical solution as well as FDM solution of the problem has not been found, the solution of the problem is represented as a comparison with FEM solution which is obtained by commercial software Ansys v14.0. In this paper only variation in poissons ratio of two materials is taken in account and it is taken as 0.32 and 0.28 for the upper and lower material respectively. The modulus of elasticity is taken as same in both material. Following the procedure stated in previous section and taking the mesh size 0.02 unit, results are obtained by both FEM and FDM methods.

In both FEM and FDM analysis, u and v are continuous over the bilayer composite and there is a single value for each parameter at the interface point. But in case of stresses, there are two values of each stress component one is for upper material and one is for lower material. Although there is a single nodal point at the interface actually it is a perfectly bonded two nodal points i.e. two nodal points from upper and lower material merge together and form a single interface point. By both the method, two values of each stress component are obtained and there is a discontinuity in the distribution of stress at the interface line of the bilayer composite material.

Fig.6 shows the comparison of displacement (v/b) distribution at various sections of the bilayer composite obtained by FDM and FEM analysis. At y/b=0.0, two results are exactly identical as the two lines merge together. At other sections of the material there are very small differences in two results. Near. In FEM results, the variation of the displacement component (v/b) is more likely identical at the upper and lower materials of the bilayer composite although there are different poissons' ratios in upper and lower materials. But in FDM results, there is non-identical displacement component (v/b) at the upper and lower materials. The displacement component (v/b) by FDM is smaller at the upper material (μ_1=0.32) than FEM result and at the lower material (μ_2=0.28), FDM result for displacement component (v/b) is larger than the FEM result. But the variation of the two results is not in significant amount. As there are different poissons' ratios in two materials of the bilayer composite, the FDM results are more logical in that sense.

The distribution of σ_{xy} as shown in fig.7 matches up with each other by FDM and FEM method in different sections of the bilayer except at the top and bottom boundary points of section at y/b=0.0. Actually, the upper corner point could be considered at the both top and left boundary. Similarly, the lower corner point could be considered at the both bottom and left boundary. If top boundary condition is applied at the upper corner point, there is mismatch in results of boundary point by FDM and FEM. In FDM, there is provision to apply either of the two boundary conditions

at the corner points. If left boundary conditions are applied at the upper and lower corner points, the FDM result becomes consistent with the FEM result as shown in fig.8.

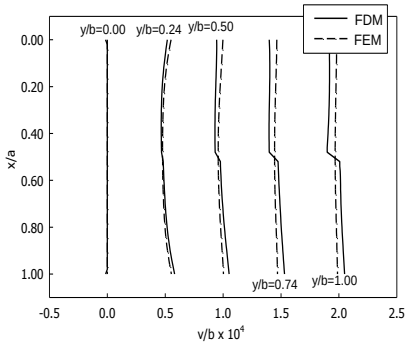

Fig.6 Comparison of displacement (v/b) distribution at various sections of the bilayer composite.

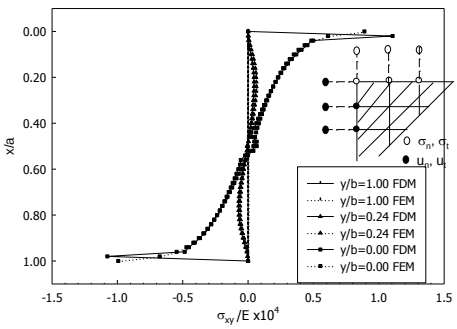

Fig.7 Comparison of shear stress distribution at different sections of the bilayer composite.

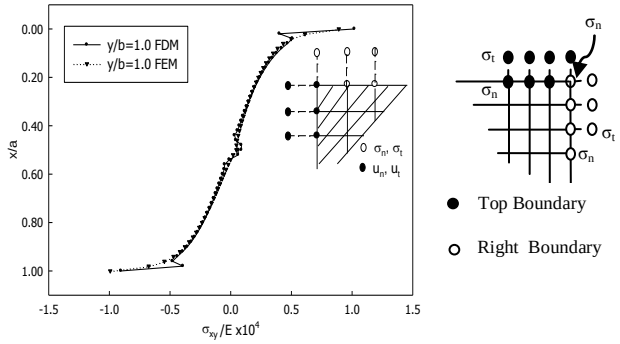

Fig.8 Comparison of normalized shear stress (σ_{xy}/E) distribution at y/b=0.0 of the bilayer composite.

The distribution of σ_y at various sections of the bilayer composite by FDM method is shown in fig.9. It indicates that for this particular problem stress at section y/b=0.0 is very significant as compared to the other sections of the material which is shown in fig.10 and most of the case it is simply equal to applied stress. From fig.9, it is seen that the FEM result shows smaller value of stress σ_y at the boundary corner points (most critical point in engineering point of view as it correspond the highest stress) than FDM result. This is obvious because in FEM method stress is calculated at every element and then extrapolated to find stress at the boundary. The distribution of stress σ_x at section y/b=0.0 as shown in fig.11 and indicates that, there is a bumping of the stress distribution curve at the interface of the bilayer composite. It is noted that, in FDM there is a provision of adjusting the corner point boundary conditions that is corner points could be considered at the either of the two boundaries i.e. at this point, either u=0,v=0 and σ_{xy}=0 or u=0,v=0 and σ_x=0 can be applied as boundary conditions. But the application of left boundary condition i.e. u=0,v=0 and σ_{xy}=0 at the corner point best accords the two solutions by FDM and FEM method. This so because if it is applied that u=0,v=0 and σ_x=0 at the left boundary corner then the FDM should gives σ_x=0 at this point and from the practical knowledge we know that at fixed support there always developed bi-directional resistive force and hence stress.

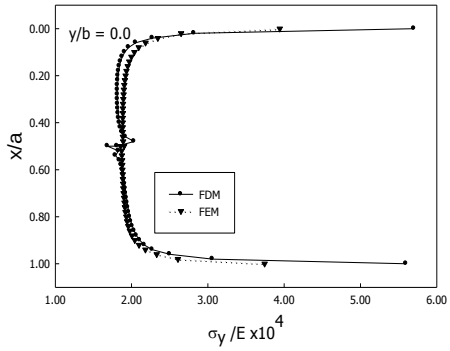

Fig.9 Comparison of normal stress (σ_y/E) distribution at y/b =0.0 by FDM and FEM.

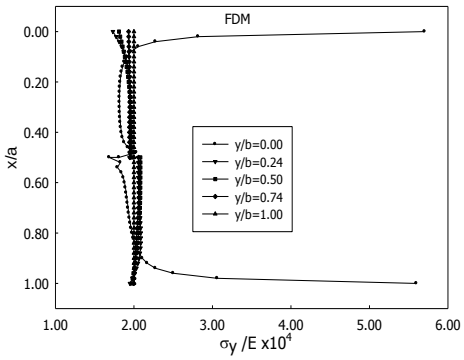

Fig.10 Normalized normal stress (σ_y/E) distribution at different sections of the material by FDM.

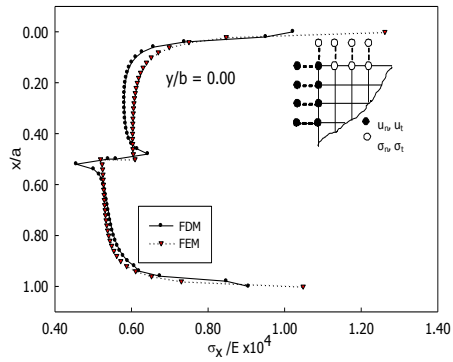

Fig.11 Comparison of normal stress (σ_x/E) distribution at y/b =0.00 considering the corner point at left boundary in FDM analysis.

5. Conclusions

The available FDM method for the numerical solutions of mixed boundary-value elastic problem based on the ψ-formulation can be applied to analysis of stresses and displacements of bi-layer composite by changing of formulation of finite difference equations of boundary conditions at the interface of bonding of two isotropic materials. The numerical formulations with greater inclusion points at the interface provide better solution of the bi-layer composite as they ensure proper compatibility between two materials.

NOMENCLATURE

E : Modulus of Elasticity, GPa
μ : Poisson ratio
ψ : Displacement potential function
σ_x : Normal stress component along x-direction
σ_y : Normal stress component along y-direction
σ_{xy} : Shear stress component in the xy plane
σ_n : Stress component normal to boundary
σ_t : Stress component tangential to boundary
u : Displacement component along x-direction
v : Displacement component along y-direction
l, m : Direction cosine of the normal at any physical boundary point
u_n : Displacement component normal to boundary
u_t : Displacement component tangential to boundary

REFERENCES

[1] Zabulionis D., "Stress and strain analysis of a bilayer composite beam with interlayer slip under hygrothermal loads", Scientific Journal "MECHANIKA", Nr.6(56), ISSN 1392 – 1207, pp 5-12, (2005).

[2] Long L., Iwasaki S., Yin F. and Nagai K. "Prediction of Nominal Stress-Strain Curves of a Multi-Layered Composite Material by FE Analysis", Materials Transactions, Vol. 51, No. 12, pp. 2188-2195, (2010).

[3] Sevecek O., Pletz M., Bermejo R., Supancic P. "Analytical Stress-Strain analysis of the laminates with orthotropic (isotropic) layers using Classical Laminate Theory", Materials Center Leoben Forschung GmbH, Presentation, (2011).

[4] Carreira R. P., Caron J. F., Diaz A. "Model of multilayered materials for interface stresses estimation and validation by finite element calculations", Materials Transactions, Vol. 51, No. 12, pp. 2188-2195, (2010).

[5] Wang Z., Wang W., Wang H. and Hu Y., "Stress Analysis on Layered Materials in Point Elastohydrodynamic-Lubricated Contacts", Tribology Letters (Springer), Vol. 35, Issue 3, pp. 229-244, (2009).

[6] Algbory A. M. R. M. "Stress analysis of the multi-layered thick cylinders", Al-Qadisiya Journal For Engineering Sciences, Vol. 4, No. 2, pp. 51-67, (2011).

[7] Nath, S.K.D., Akanda, M.A.S., Ahmed, S.R. and Uddin, M.W., "Numerical investigation of bond-line stresses of tire tread section", International Journal of Applied Mechanics and Engineering, Vol. 13, No. 1, pp. 43-61, (2008).

[8] Alam, M. T., Akanda, M.A.S and Mandal, A.C., "Stress analysis of composite lamina having a square hole by finite difference technique", Proceedings of International Conference on Mechanical & Manufacturing Engineering, pp. 1-6, Johor Bahru, Malaysia, May 21-23, (2008).

[9] Uddin, M. W., "Finite difference solution of two-dimensional elastic problems with mixed boundary conditions", M. Sc. Thesis, Carleton University, Canada, (1966).

[10] Idris A.B.M, "A new approach to solution of mixed boundary value elastic problem", M. Sc. Thesis, BUET, Bangladesh, (1993).

[11] Akanda, M. A. S., "Stress analysis of gear teeth", M. Sc. Thesis, BUET, Bangladesh, (1997).

[12] Akanda, M. A. S., Ahmed, S.R., Khan, M. R., and Uddin, M. W., "A finite-difference scheme for mixed boundary-value problems of arbitrary-shaped elastic bodies", Adv. in Engng Soft, Vol. 31, No. 3, pp. 173-184, (2000).

[13] Akanda, M. A. S., Ahmed, S.R. and Uddin, M. W., "Stress analysis of gear teeth using displacement potential function and finite-differences", Int. J. Numer. Meth. in Engng., Vol-53, No. 7, pp 1629-1649, (2002).